Model No: **2 x IC8025-XX , IC8011-XX IT2060D-XX, 2 x IB1001-XX**

SPEC SHEET

PRODUCT DESCRIPTION

- WATSON 60 Double free standing cabinet
- Available in Dark Walnut (30), Espresso (40), Metal Gray (45), and Matt White (50) finish
- Solid wood and hardwood plywood construction
- Soft close doors and drawers
- Drawer length is 18"
- Modular collection that requires some assembly (See installation instructions for more details)
- Quartz stone top available in White, Beige, Gray, and Calacatta color
- Undermount porcelain basin available in white and beige color (with overflow hole)
- Nominal Dimensions:

Width: 60"
Depth: 22"
Height: 34.5"

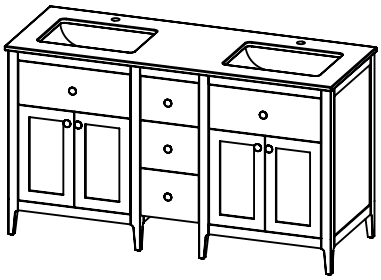

ROUGHING-IN DIMENSIONS

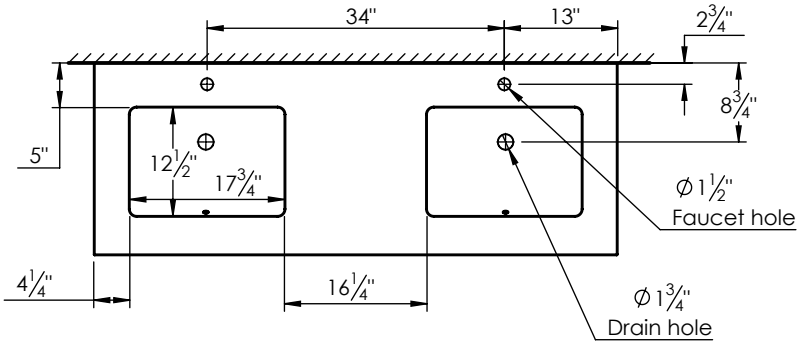

TOP VIEW

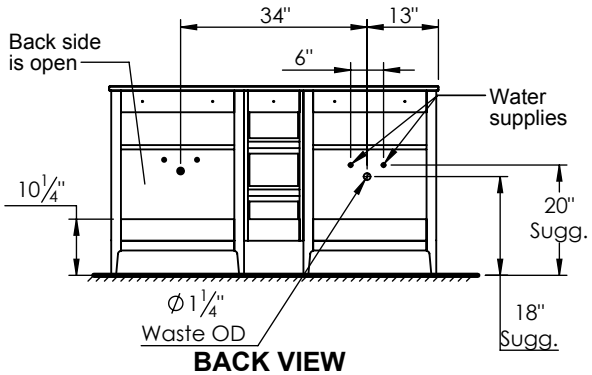

BACK VIEW

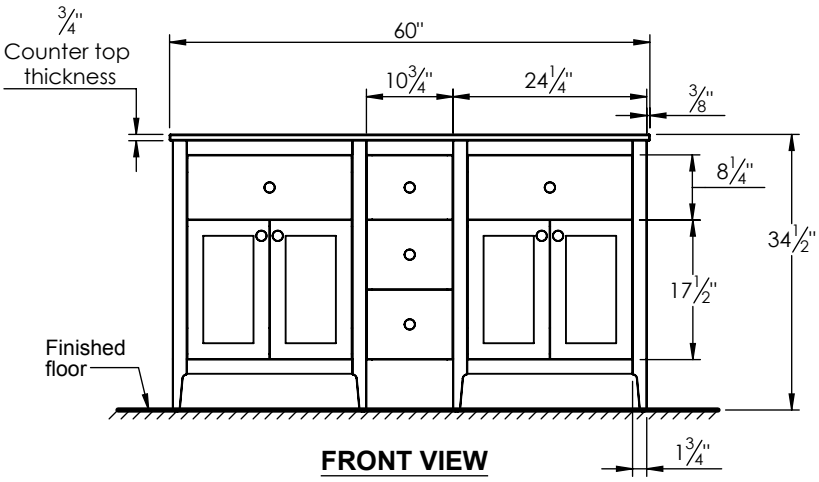

FRONT VIEW

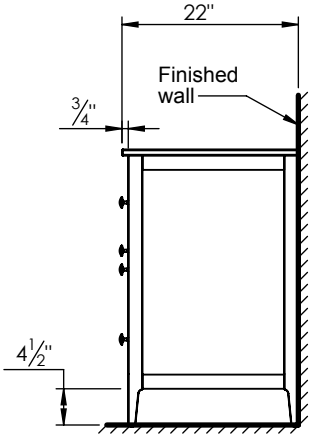

SIDE VIEW