Model No: **IC9560D-XX, IT7560D-XX**

SPEC SHEET

PRODUCT DESCRIPTION

- PARKER 60 Double Basin with Infinity Solid Surface counter top
- Wall mount cabinet with BLUM mounting hardware
- Cabinet is available in Matte White, Rock gray, Natural Walnut, and Black Elm
- Hardwood plywood construction
- Soft close and full extension drawers
- Aluminum hardware available in matt black, brushed nickel, polished chrome, and brished gold finish
- Solid Surface counter top with integrated basins and infinity drains in Matt White
- Drain assembly and 10" drain tail included
- Solid Surface material is 38% polyester resin and 40% aluminum hydroxide powder
- Basin depth is 3 1/2"

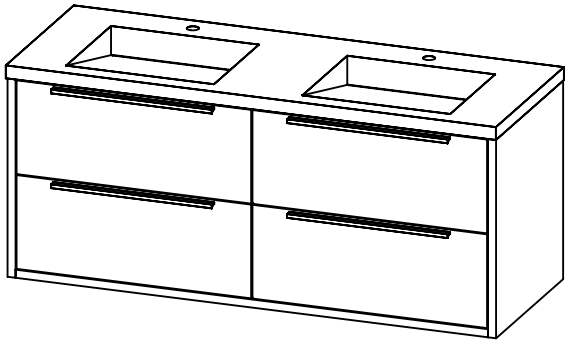

ROUGHING-IN DIMENSIONS

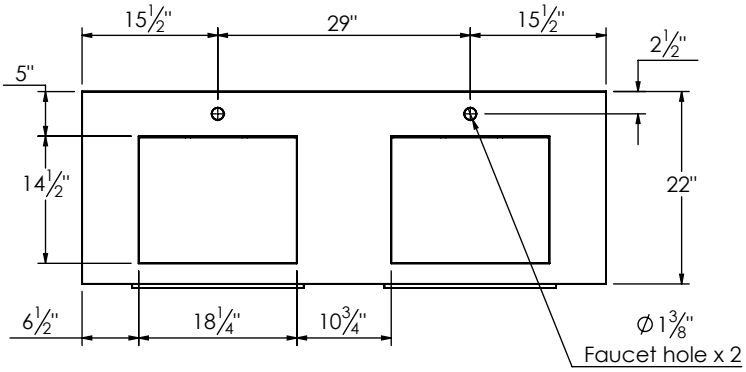

TOP VIEW

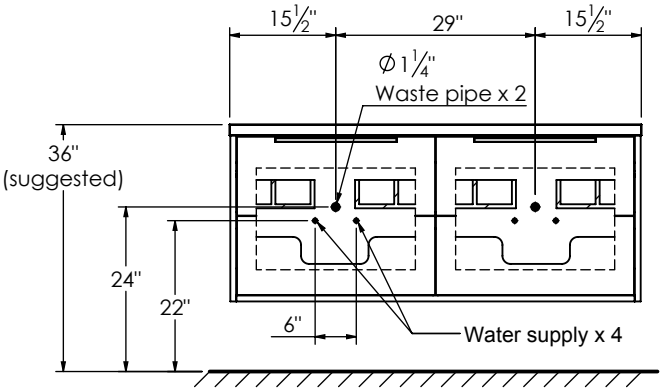

ROUGH PLUMBING

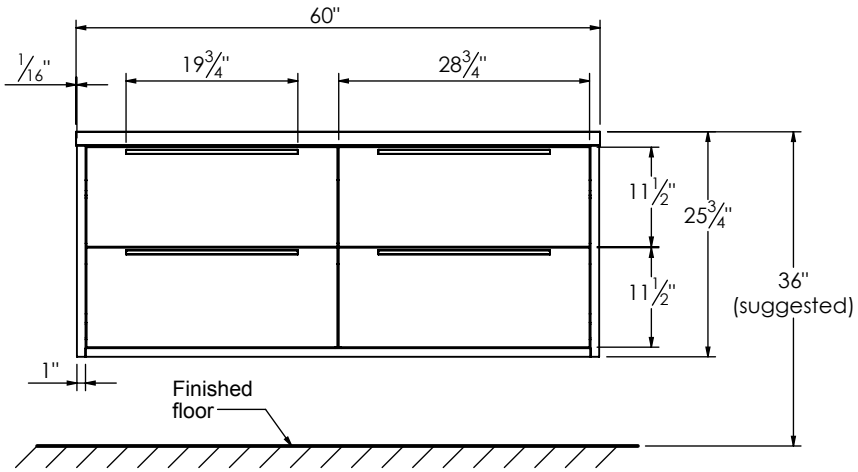

FRONT VIEW

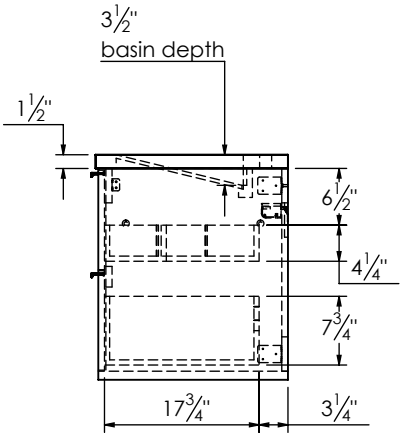

SIDE VIEW