Model No: (2)**IC9531-XX + IC9536-XX, (2)IT7031-95 + IT8036-95**

SPEC SHEET

PRODUCT DESCRIPTION

- PARKER 98 Modular Double Basin with Infinity Solid Surface counter top
- Wall mount cabinet with BLUM mounting hardware
- Cabinet available in Matte White, Rock Grey, Natural Walnut, Brushed White Oak, and Black Elm
- Hardwood plywood construction with laquer paint, or natural wood veneer
- Soft close and full extension drawers
- Aluminum handles available in Polish Chrome, Brushed Nickel, Matte Black, and Brushed Gold
- Solid Surface counter top with integrated basins and infinity drains in Matt White
- Drain assembly and 10" drain tail included
- Solid Surface material is 38% polyester resin and 60% aluminum hydroxide powder
- Basin depth is 3 1/2"

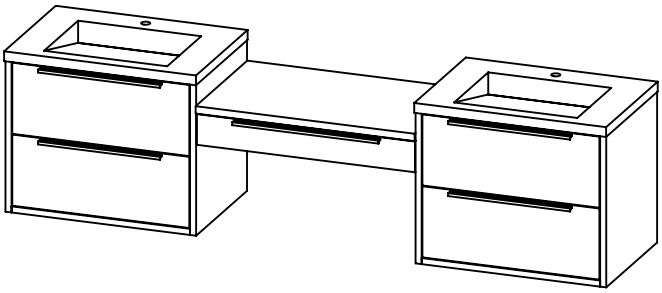

ROUGHING-IN DIMENSIONS

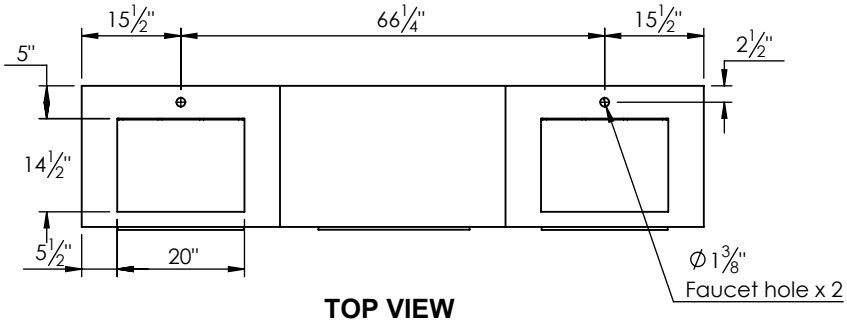

TOP VIEW

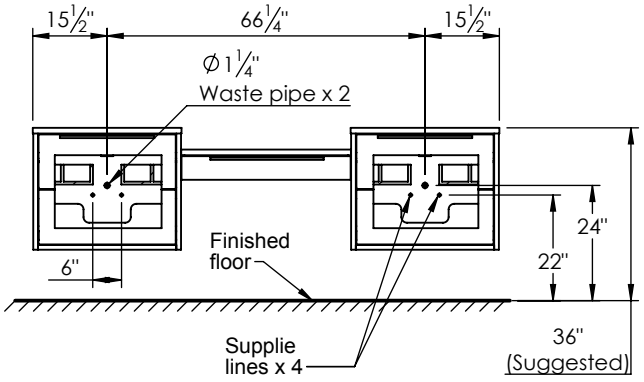

ROUGH PLUMBING

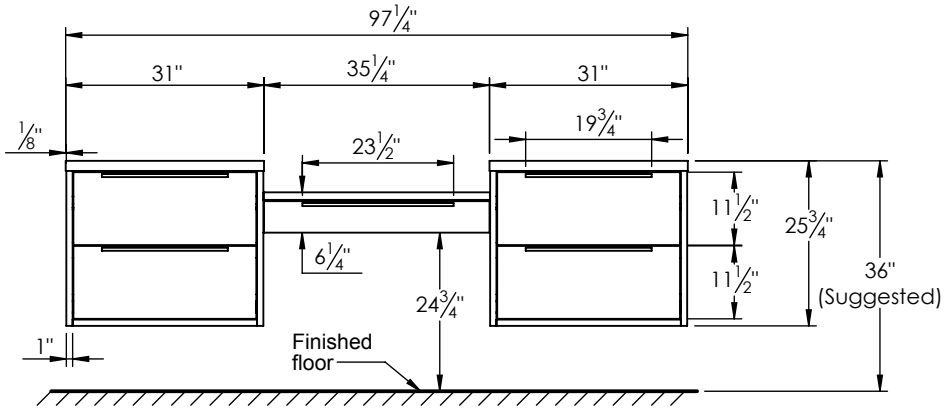

FRONT VIEW

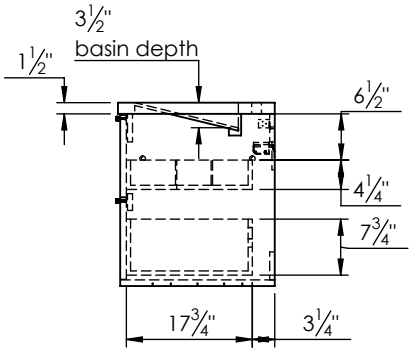

SIDE VIEW