Model No: IC7531-XX, IT9031-XX, IB1008-70

SPEC SHEET

PRODUCT DESCRIPTION

- Logan 31 wall mount vanity
- Available in Natural Elm (36), Matte White (50), Rock Gray (52) and Natural Walnut (56) finish
- Cabinet is fully assembled
- Hardwood Plywood construction
- Soft close door and drawers
- Features 2 glass dividers on the top drawer
- Features a removable wood divider on the bottom drawer
- Blum wall hung system
- Includes a 3CM thick quartz stone counter top available in white and alabaster color
- Back and side splash are optional
- Lotus undermount porcelain basin with square shape in white (with overflow hole)
- Basin depth is 5" (including top thickness)

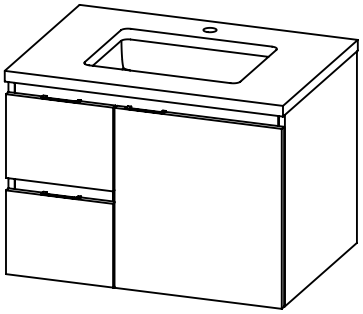

ROUGHING-IN DIMENSIONS

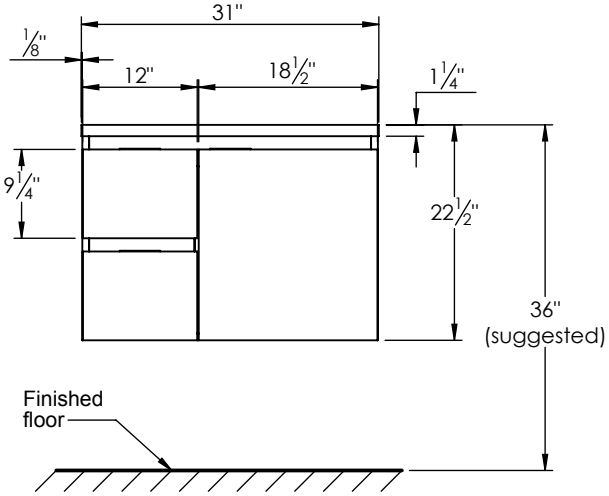

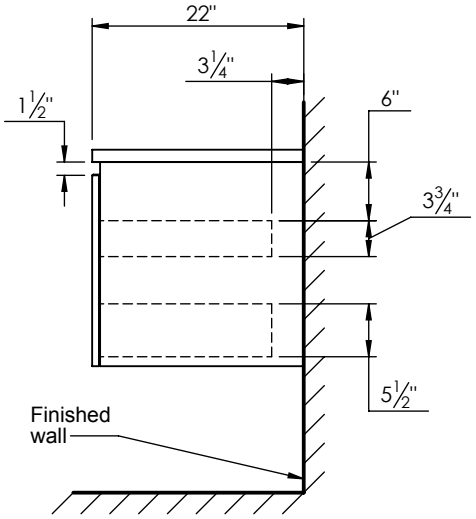

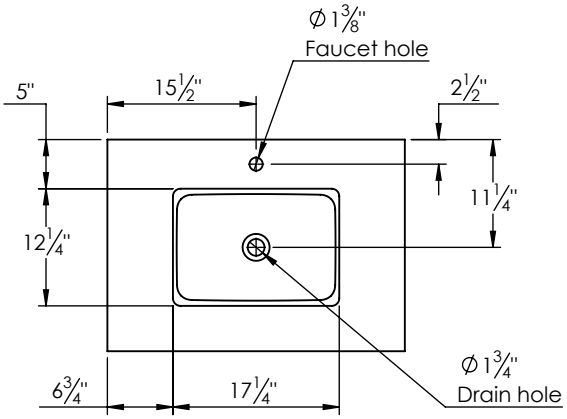

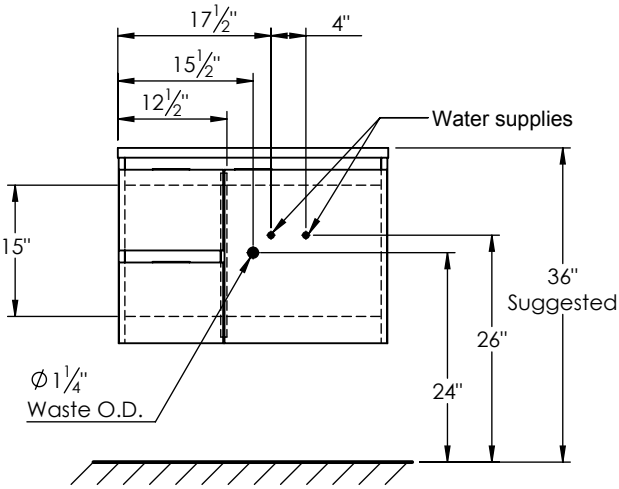

ROUGH PLUMBING