Model No: **IC9060D-XX, IT7560D-XX**

SPEC SHEET

PRODUCT DESCRIPTION

- ALFRED 60 Double Basin with Infinity Solid Surface counter top
- Wall mount cabinet with BLUM mounting hardware
- Cabinet available in American Walnut (55) and Matt White (50) finish
- Solid American walnut wood construction or hardwood plywood construction for matt white finish
- Soft close and full extension drawers
- Solid brass hardware available in matt black, brushed nickel, and polished chrome finish
- Solid Surface counter top with integrated basins and infinity drains in Matt White
- Drain assembly and 10" drain tail included
- Solid Surface material is 38% polyester resin and 40% aluminum hydroxide powder
- Basin depth is 3 1/2"

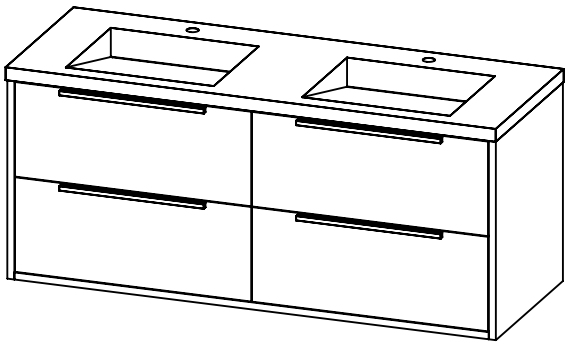

ROUGHING-IN DIMENSIONS

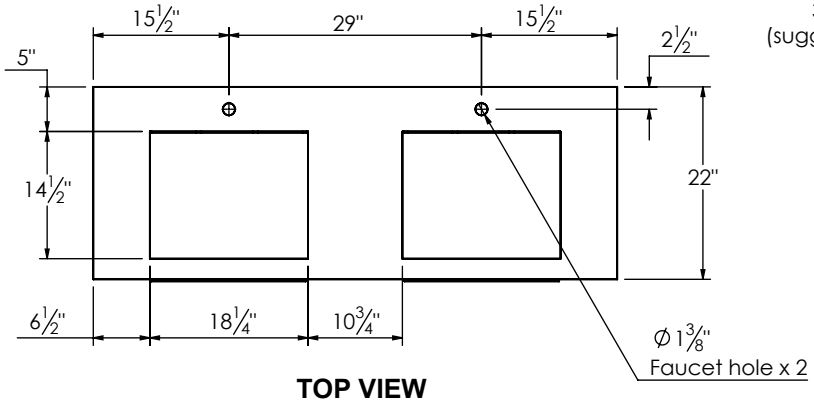

TOP VIEW

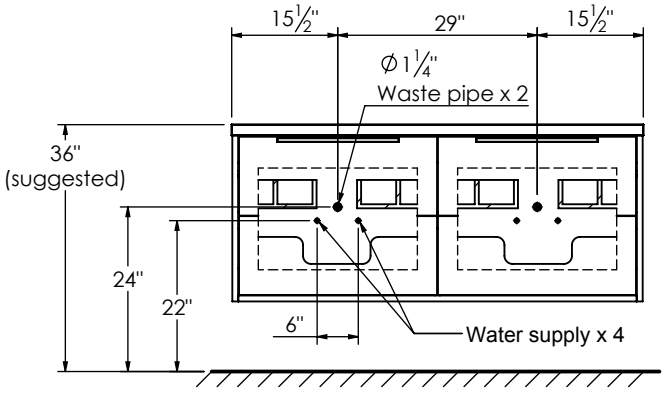

ROUGH PLUMBING

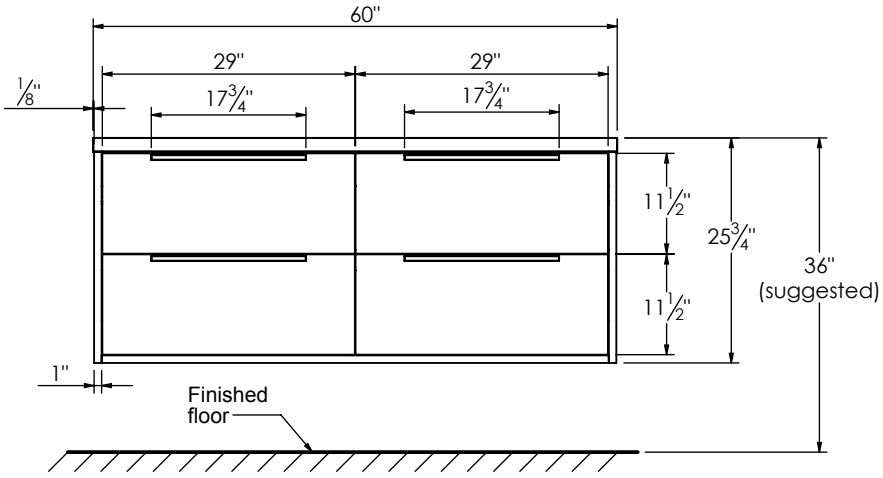

FRONT VIEW

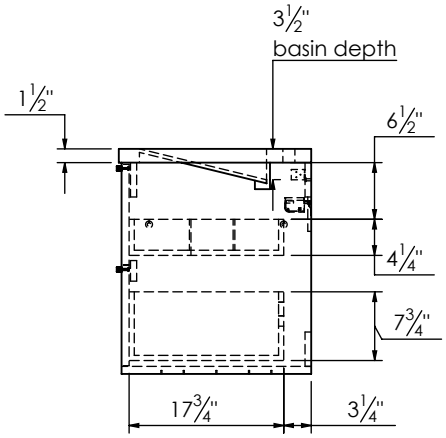

SIDE VIEW