Model No: IC6060-XX, IT2060-XX, 2 X IB1001-XX

SPEC SHEET

PRODUCT DESCRIPTION

- VICTORIA 60 free standing cabinet
- Available in Dark Walnut (30), Espresso (40), and White (50) finish
- Solid wood construction
- Soft close doors
- Features soft close drawers with cut out for drain pipe
- Quartz stone top available in white, beige, and gray color
- Undermount porcelain basin available in white and beige color (with overflow hole)
- Knobs in brushed nickel (Chrome finish is optional)
- Nominal Dimensions:

Width: 60"
Depth: 22"
Height: 34.5"

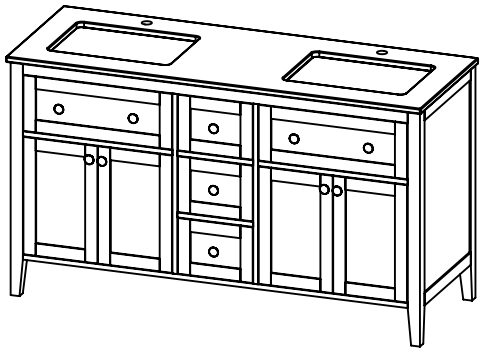

ROUGHING-IN DIMENSIONS

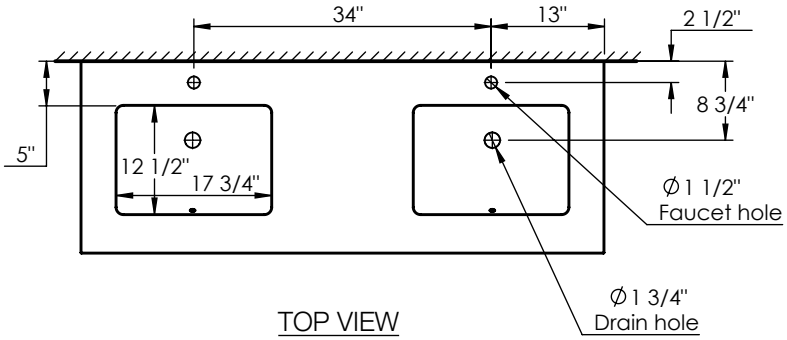

TOP VIEW

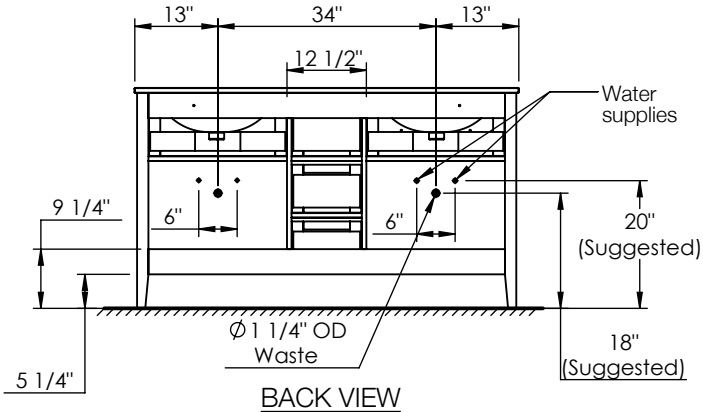

BACK VIEW

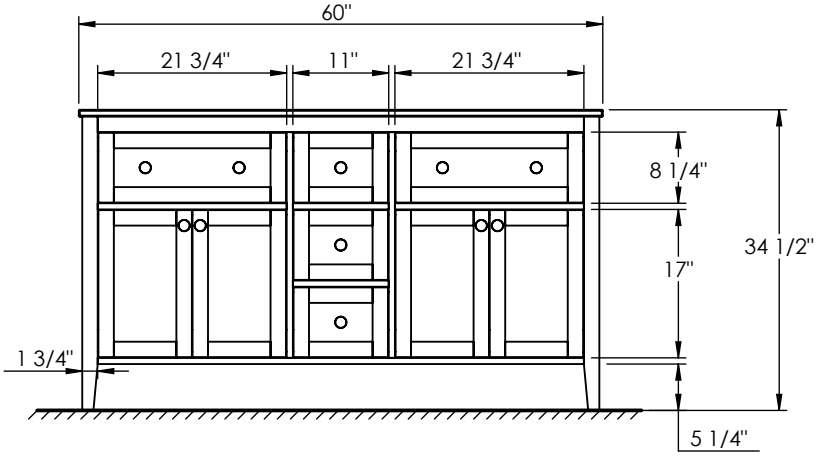

FRONT VIEW

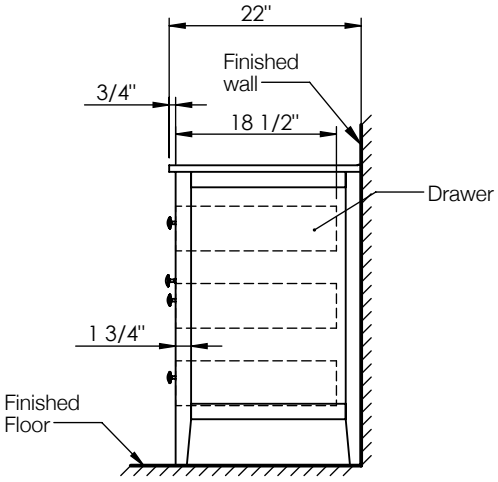

SIDE VIEW