Model: **IF2009**

AXEL - Single handle basin faucet

SPEC SHEET

DESCRIPTION

- Single hole installation
- Kerox ceramic cartidge - limited lifetime warranty
- Cascade style
- Flow rate1.2 gpm @ 60 psi
- Supply lines 3/8” Comp.
- Solid brass construction (lead free)
- Pop up drain sold separately

COMPLIANCE

- NSF/ANSI 61
- ASME A112.18.1
- CSA B125.1
- NSF/ANSI 372-2011 (lead free certified)

AVAILABLE FINISHES

- Polished chrome (00)

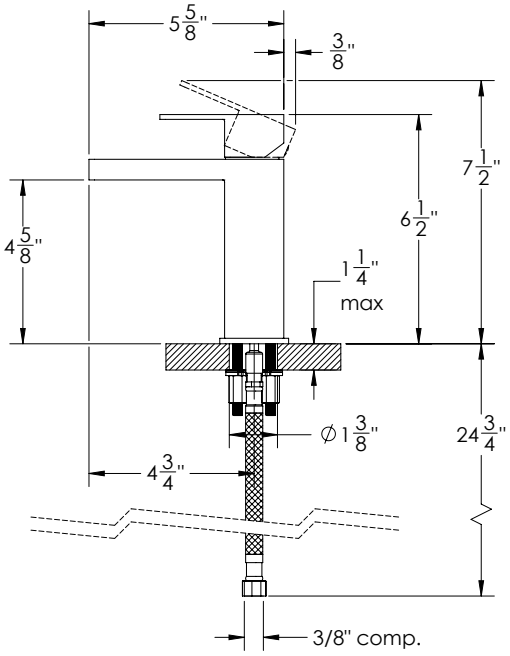

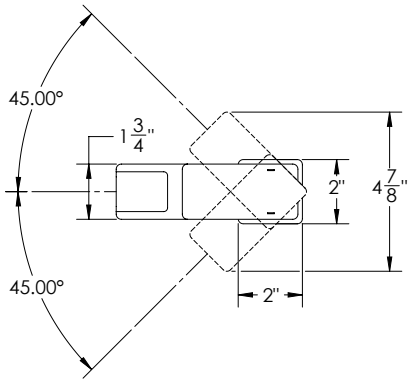

For questions call us at 1-855 472 4304 or visit our website at www.inolav.com